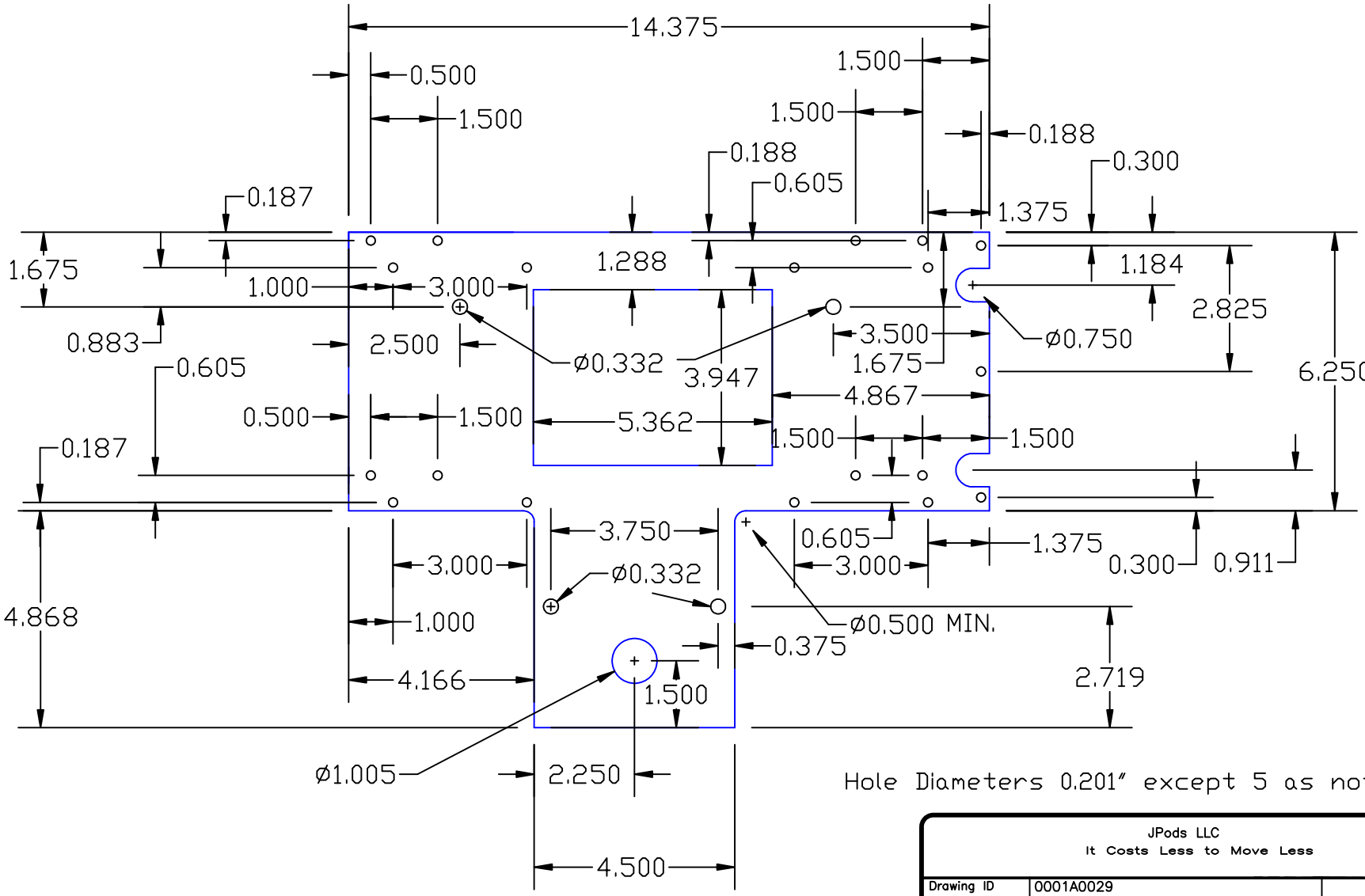

Hole Diameters 0.201" except 5 as noted

3/8" Aluminum 6061 or 5052

JPods LLC
It Costs Less to Move Less

Drawing ID	0001A0029	
Title/Description	Bogie Load Plate	Rev. 1
	Drawn by: Gordon Israelson Checked by: NA	26 December 2006
Drawing Change:	NA	Sheet 1 of 1